RWY 21
RØST
NORWAY

AERODROME OBSTACLE CHART - ICAO

DIMENSIONS IN METRES AND ELEVATIONS IN METRES ABOVE MEAN SEA LEVEL

TYPE A - OPERATING LIMITATIONS

MAGNETIC VARIATION 2,9° E - 2010

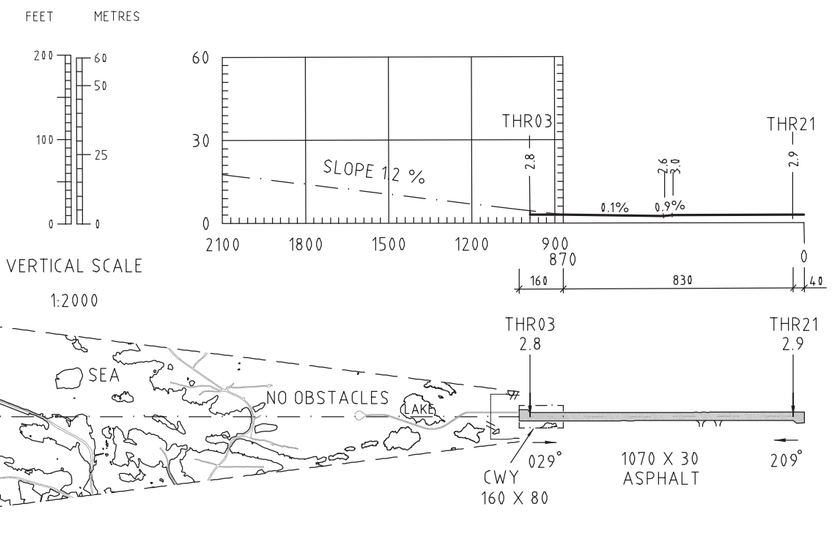

DECLARED DISTANCES

RWY 03		RWY 21
870	TAKE-OFF RUN AVAILABLE	870
1030	TAKE-OFF DISTANCE AVAILABLE	1030
870	ACCELERATE STOP DISTANCE AVAILABLE	870
830	LANDING DISTANCE AVAILABLE	830

TURN PARAMETERS

IAS	110 KIAS
Bank angle	15°
Temperature	ISA + 15°
Radius of turn/Alt	1320M/1000FT AMSL

LEGEND

IDENTIFICATION NUMBER	1
BUILDING OR LARGE STRUCTURE	■
TREE	✳
POLE, TOWER, ANTENNA, ETC.	⊙
ROAD	
COAST	
LAKE, RIVER	
TRANSMISSION LINE	—T—
TERRAIN CONTOUR	
TERRAIN PENETRATING OBSTACLE PLANE	

HORIZONTAL SCALE 1:20 000

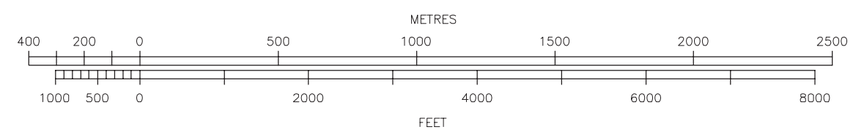

AMENDMENT RECORD		
No.	DATE	ENTERED BY

CHANGES: THR 03, CWY, MAG.VAR, OBSTACLES AND EDITORIAL